DWG. NO.

NO	DESCRIPTION	MAT'L	Q'TY	UNIT WEIGHT (Kg)	TOTAL WEIGHT (Kg)	REMARKS

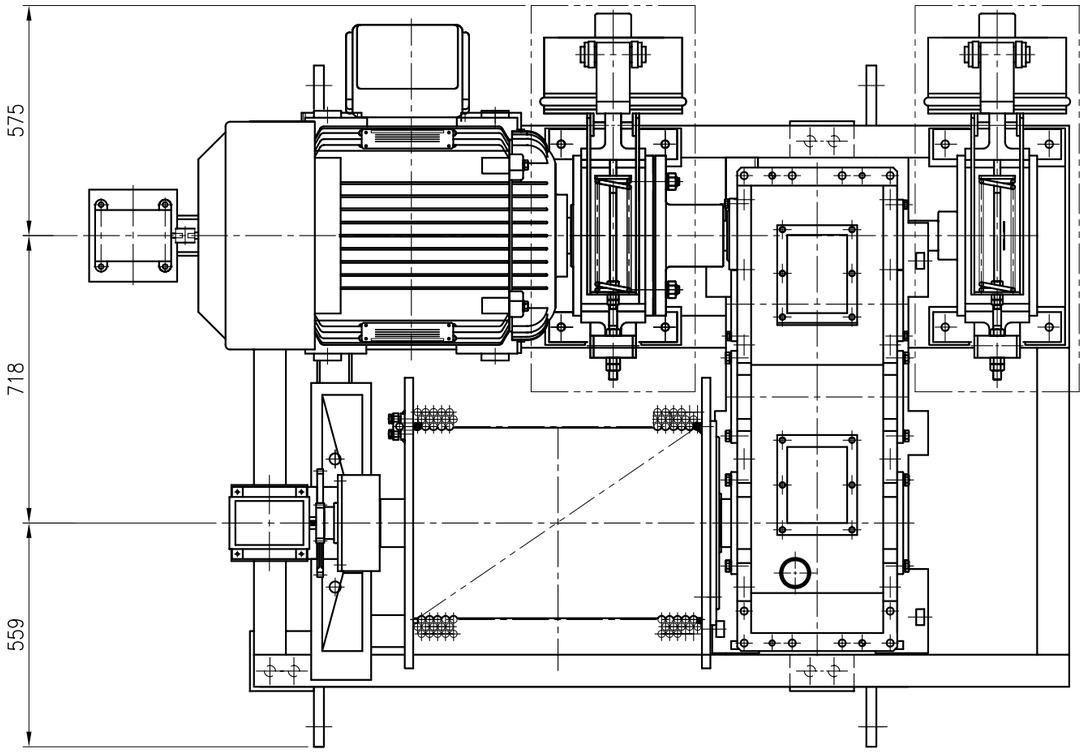

SPECIFICATION	
LOAD (TON)	14 TON
ROPE FALLS	4
MAX. LIFT (M)	50M (TOTAL 3RD LAYER)
ELE. MOTOR	55KW x 8P
ELE. POWER	AC440V x 60Hz x 3PHASE
STEEL WIRE ROPE	ø18
BRAKE	MAGNATIC BRAKE
REDUCTION RATIO	1/27.88

$V = \pi \times 0.512 \times 880 \times 1/27.88 \times 1/4 = 12.69M/MIN$

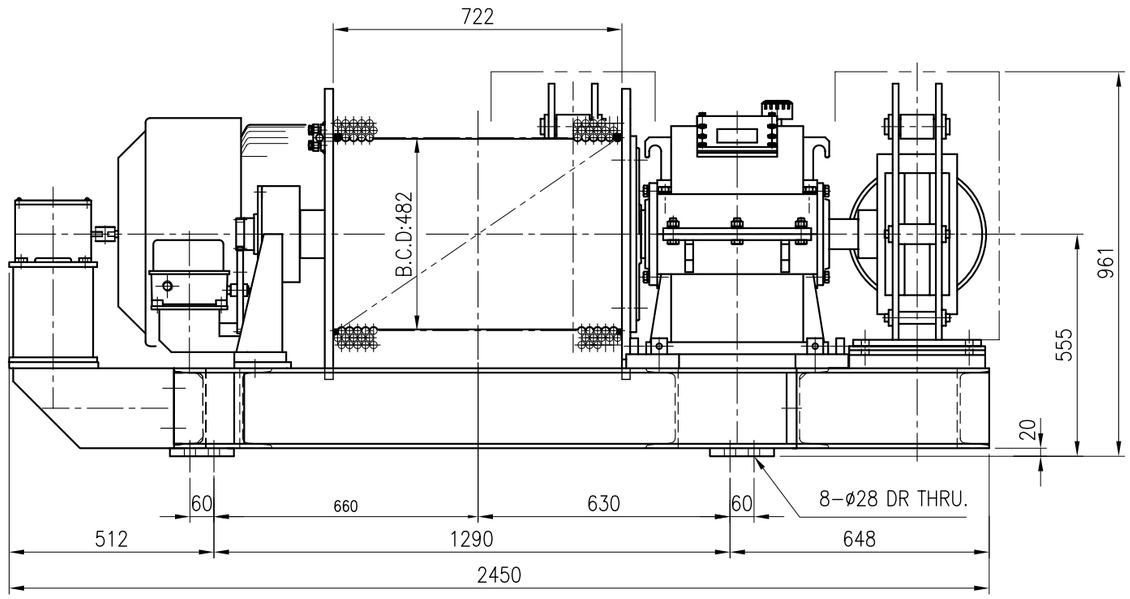

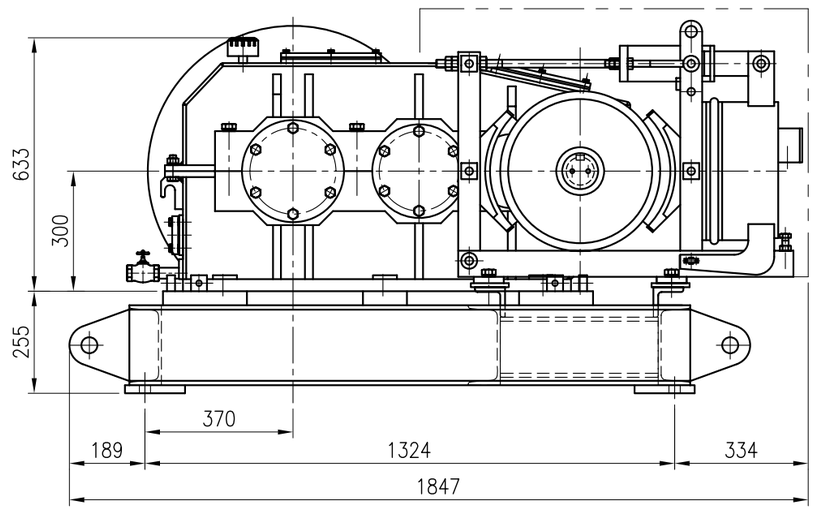

SURFACE ROUGHNESS COLLATION TABLE (mu)

Ra		25	12.5	6.3	3.2	1.6	0.8	0.4	0.2	0.1
Rmax	NON-FINISH	100S	50S	25S	12.5S	6.3S	3.2S	1.6S	0.8S	0.4S

NO.	DATE	REVISIONS & DESCRIPTION	Drawn	Checked	Reviewed	Approved
2						
1						

SA HAE MACHINERY CO.					SCALE	N/S	DATE	–		
PROJECT	14TON TOWER CRANE (HT380)				DIM.	mm	PRO-JECTION			
TITLE	ASSEMBLY OF HOISTING				Customer	–				
	55KW x880R.P.M x 1/27.88				DWG No.	A-SHM-HT380-H014-01				
USER	Division	Checked	Reviewed	Approved	SHMC	Division	Drawn	Checked	Reviewed	Approved
	Signature					Signature	KHS			
	Date					Date				
					Cod No.					0